3Megapixel Weatherproof Network IR Camera

SNO-7084R

Key Features

- 30fps@2,048 x 1,536 / 60fps@1,920 x 1,080
- Simple focus (Motorized VF), P-Iris
- Day&Night (ICR), Enhanced DIS, Defog
- 3M real-time WDR (Max. 120dB)
- Color : 0.1Lux (F1.2, 50IRE)
  B/W : 0Lux (IR LED on)
- Built-in SD/SDHC/SDXC memory slot
- Multi-crop streaming
- IP66 / IK10

Dimensions

Unit : mm (inch)

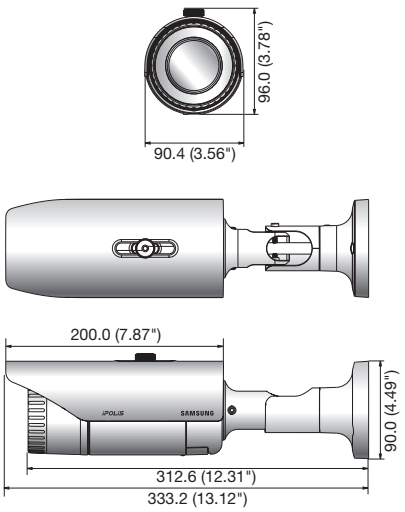

	SNO-7084RN/P
VIDEO	
Imaging Device	1/2.8" PS Exmor 3.2M CMOS
Total Pixels	2,065(H) x 1,565(V)
Effective Pixels	2,065(H) x 1,553(V)
Scanning System	Progressive
Min. Illumination	Color : 0.1Lux (F1.2, 50IRE), 0.06Lux (F1.2, 30IRE) B/W : 0Lux (F1.2, 50IRE), 0Lux (F1.2, 30IRE)
S / N Ratio	50dB
Video Output	CVBS : 1.0 Vp-p / 75Ω composite, 720 x 480(N), 720 x 576(P), for installation Connector type
LENS	
Focal Length (Zoom Ratio)	3 ~ 8.5mm (2.8x) motorized varifocal
Max. Aperture Ratio	F1.2
Angular Field of View	H : 100.12°(Wide) ~ 35.38°(Tele) / V : 73.76°(Wide) ~ 26.58°(Tele)
Min. Object Distance	0.5m (1.64ft)
Focus Control	Simple focus (Motorized V/F) / Manual, Remote control via network (Manual, Simple focus)
Lens Type / Mount Type	DC auto iris, P-Iris / Board-in type
OPERATIONAL	
IR LED	20ea
Viewable Length	30m (98.43ft)
Camera Title	Off / On (Displayed up to 45 characters)
Day & Night	Auto (ICR) / Color / B/W / External / Schedule
Backlight Compensation	Off / BLC / WDR
Wide Dynamic Range	120dB
Contrast Enhancement	SSDR (Samsung Super Dynamic Range) (Off / On)
Digital Noise Reduction	SSNRIII (2D+3D noise filter) (Off / On)
Digital Image Stabilization	Off / On
Defog	Off / Auto / Manual
Motion Detection	Off / On (4 zones with 4 points polygonal)
Privacy Masking	Off / On (32zones with 4 points of polygonal)
Gain Control	Off / Low / Middle / High
White Balance	ATW / AWC / Manual / Indoor / Outdoor
Electronic Shutter Speed	Minimum / Maximum / Anti flicker (1 ~ 1/12,000sec)
Flip / Mirror	Off / On
Intelligent Video Analytics	Tampering, Virtual line, Enter / Exit, Appear / Disappear, Audio detection, Face detection with metadata
Alarm I/O	Input 1ea / Output 1ea
Alarm Triggers	Motion detection, Tampering, Audio detection, Face detection, Network disconnection, Video analytics, Alarm input
Alarm Events	File upload via FTP and E-mail, Notification via E-mail, Local storage (SD/SDHC/SDXC) or NAS recording at event, External output
NETWORK	
Ethernet	RJ-45 (10/100BASE-T)
Video Compression Format	H.264 (MPEG-4 part 10/AVC), MJPEG
Resolution	2048 x 1536, 1920 x 1080, 1600 x 1200, 1280 x 1024, 1280 x 960, 1280 x 720, 1024 x 768, 800 x 600, 800 x 450, 640 x 480, 640 x 360, 320 x 240, 320 x 180
Max. Framerate	H.264 : Max. 30fps@2048 x 1536, Max 60fps@the other resolutions MJPEG : Max. 10fps@2048 x 1536 Max. 15fps@1920 x 1080, 1600 x 1200, 1280 x 1024, 1280 x 960, 1280 x 720, 1024 x 768 Max. 30fps@800 x 600, 800 x 450, 640 x 480, 640 x 360, 320 x 240, 320 x 180
Smart Codec	Manual mode (Area-based : 5ea), Face detection mode
Video Quality Adjustment	H.264 : Compression level, Target bitrate level control, MJPEG : Quality level control
Bitrate Control Method	H.264 : CBR or VBR, MJPEG : VBR
Streaming Capability	Multiple streaming (Up to 10 profiles)
Audio In	Selectable (Mic in / Line in), Supply voltage : 2.5V DC (4mA), Input impedance : approx. 2K Ohm
Audio Out	Line out (3.5mm mono jack), Max output level : 1 Vrms
Audio Compression Format	G.711 u-law /G.726 selectable, G.726 (ADPCM) 8KHz, G.711 8KHz G.726 : 16Kbps, 24Kbps, 32Kbps, 40Kbps
Audio Communication	Bi-directional audio
IP	IPv4, IPv6
Protocol	TCP/IP, UDP/IP, RTP(UDP), RTP(TCP), RTCP,RTSP, NTP, HTTP, HTTPS, SSL, DHCP, PPPoE, FTP, SMTP, ICMP, IGMP, SNMPv1/v2c/v3(MIB-2), ARP, DNS, DDNS, QoS, PIM-SM, UPnP, Bonjour
Security	HTTPS(SSL) login authentication, Digest login authentication IP address filtering, User access log, 802.1x authentication
Streaming Method	Unicast / Multicast
Max. User Access	15 users at unicast mode
Edge Storage	micro SD/SDHC/SDXC 4GB SD memory built-in, Motion images recorded in the SDXC/SDHC/SD memory card can be downloaded
Application Programming Interfac	ONVIF profile S, SUNAPI (HTTP API) v2.0, SVNP 1.2
Webpage Language	English, French, German, Spanish, Italian, Chinese, Korean, Russian, Japanese, Swedish, Danish, Portuguese, Turkish, Polish, Czech, Rumanian, Serbian, Dutch, Croatian, Hungarian, Greek, Norwegian, Finnish
Web Viewer	Supported OS : Windows XP / VISTA / 7 / 8, MAC OS X 10.7 Supported Browser : Microsoft Internet Explorer (Ver. 11, 10, 9, 8), Mozilla Firefox (Ver. 19, 18, 17, 16, 15, 14, 13, 12, 11, 10, 9), Google Chrome (Ver. 25, 24, 23, 22, 21, 20, 19, 18, 17,16, 15), Apple Safari (Ver. 6.0.2(Mac OS X 10.8, 10.7 only), 5.1.7) * Mac OS X only
Central Management Software	SmartViewer
ENVIRONMENTAL	
Operating Temperature / Humidity	24V AC : -50°C ~ +55°C (-58°F ~ +131°F) / Less than 90% RH 12V DC, PoE : -10°C ~ +55°C (+14°F ~ +131°F) / Less than 90% RH
Storage Temperature / Humidity	-30°C ~ +60°C (-22°F ~ +140°F) / Less than 90% RH
Ingress Protection	IP66
Vandal Resistance	IK10

افغان تکسار
AFGHAN TAKSAR
Communication & Security Solutions

AFGHAN TAKSAR LTD.
Shahr -e- Naw, Haji Yaqoob Square, Opposite Hanzala Mosque,
Kabul - Afghanistan
+93 (0) 202 33 33 33 / 777 38 38 38
Fax: +93 (0) 202 21 30 03 / P.O. Box: 5480
info@afghantaksar.com
www.afghantaksar.com

SAMSUNG
SAMSUNG TECHWIN